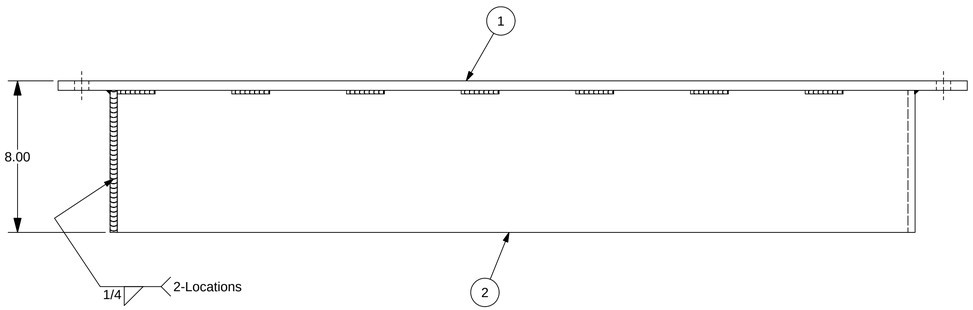

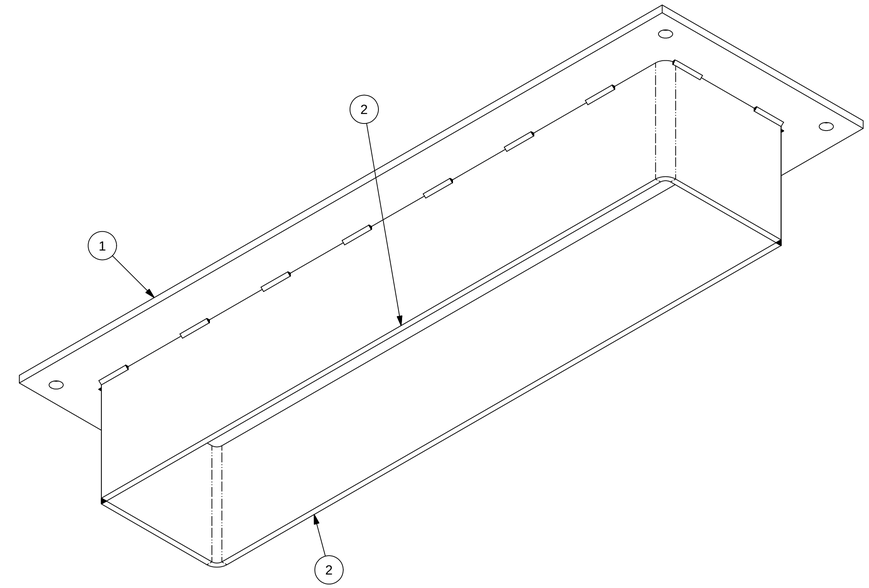

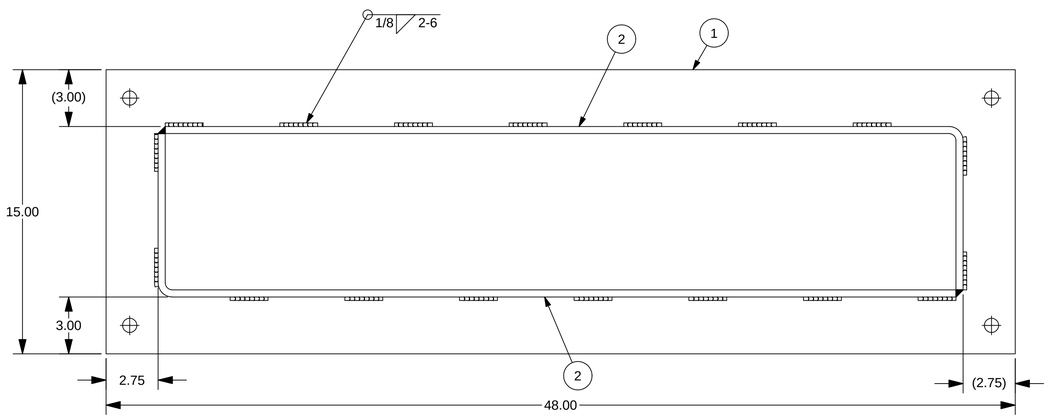

QTY'S BASED ON 2 UNITS

ITEM	QTY	PART NUMBER	DESCRIPTION	MATERIAL	THICKNESS	LENGTH	WIDTH	Process
2	4	409-2956-LFF7EA-611-03	PUMP MOUNT STIFFENER	3/8 HR PLATE - A36 STEEL PLATE	.375 in	7.50 in	50.03 in	BURN/BEND
1	2	409-2956-LFF7EA-611-01	PUMP MOUNT PLATE	1/2 HR PLATE - A36 STEEL PLATE	.500 in	48.00 in	15.00 in	BURN/DRILL

BILL OF MATERIAL

NOTES:
1. WELD CONNECTIONS: VISUALLY INSPECT ALL WELD CONNECTIONS.
2. WELDS ARE TO BE 1/16" LESS THAN THE MINIMUM THICKNESS OF MATERIAL WHERE NOT SPECIFICALLY CALLED OUT OR NOTED OTHERWISE. ALL WELDING SHALL CONFORM TO THE AMERICAN WELDING SOCIETY CODE D1.1. ALSO ASME/ANSI B16 STANDARDS FOR PIPES & FITTINGS AND FOLLOW THE PROPER WPS POSTED IN WORK AREA.
3. ALL MATERIAL SHALL BE ASTM A36, UNLESS OTHERWISE STATED.

REV	DESCRIPTION	AUTHOR	DATE	CHECKED B	QA/QC
0	ISSUED FOR FABRICATION	S. Boerckel	1/27/2011	T. KOONTZ	B. MADDUX

REVISION HISTORY

© COPYRIGHT, 2009, PRO STEEL MANUFACTURING ALL RIGHTS RESERVED. THIS DRAWING IS THE PROPRIETARY AND/OR CONFIDENTIAL PROPERTY OF PRO STEEL MANUFACTURING AND IS LOANED IN STRICT CONFIDENCE WITH THE UNDERSTANDING THAT IT WILL NOT BE REPRODUCED NOR USED FOR ANY PURPOSE EXCEPT THAT FOR WHICH IT IS LOANED. IT SHALL BE IMMEDIATELY RETURNED ON DEMAND, AND IS SUBJECT TO ALL OTHER TERMS AND CONDITIONS OF ANY WRITTEN AGREEMENT OR PURCHASE ORDER WHICH INCORPORATES OR RELATES TO THIS DRAWING.

UNLESS OTHERWISE SPECIFIED
DIMENSIONS ARE IN INCHES
TOLERANCES ON DECIMALS
X.X ± 0.10
X.XX ± 0.06
X.XXX ± 0.03
HOLE DIA ± 0.03
ANGLES ± 0.50°
SURFACE HFS-SF
SQUARENESS ± 0.06

DO NOT SCALE DRAWING

DRAWN	S. Boerckel	1/27/2011
CHECKED	T. KOONTZ	2/3/2011
QA	B. MADDUX	2/3/2011
REVIEWER		
PROJECT NO	409-2956-1	
CUSTOMER	EDC - MARGARITA ISLAND	
JOB NO		

ProEnergy SERVICES.
2201 ProEnergy Blvd
SEDALIA, MISSOURI 65301 USA
PHONE: 1-660-829-5100
FAX: 1-660-829-1160

TITLE
PUMP MOUNT
WELDMENT
LIQUID FUEL FORWARDING SKID - 7EA

SIZE D | ML: | DWG NO 409-2956-LFF7EA-0611-1 | REV 0
SCALE: 1/4"=1" | WEIGHT: 182 lbmass | SHEET 1

ProEnergy SERVICES
Document Control
Feb 04, 2011

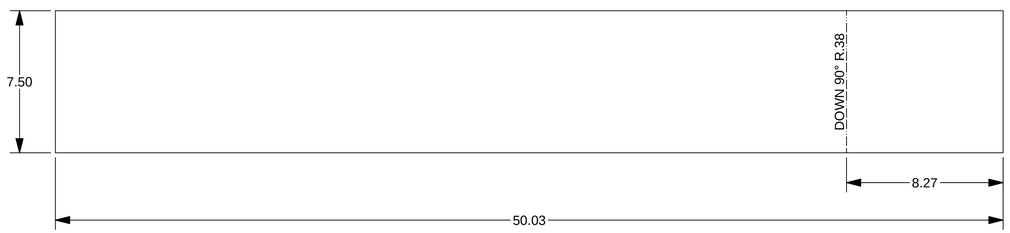

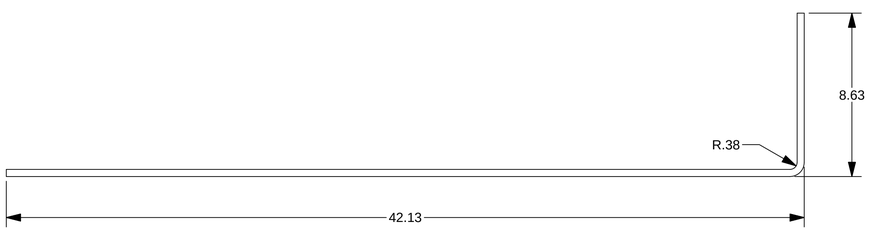

ITEM	QTY	PART NUMBER	MATERIAL
2	4	409-2956-LFF7EA-611-03	3/8 HR PLATE - A36 STEEL PLATE

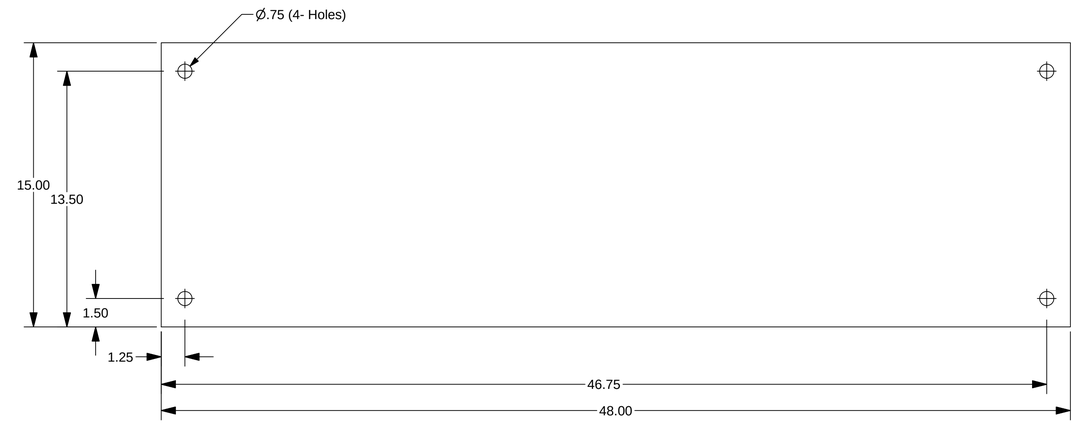

ITEM	QTY	PART NUMBER	MATERIAL
1	2	409-2956-LFF7EA-611-01	1/2 HR PLATE - A36 STEEL PLATE

ProEnergy SERVICES
Document Control
Feb 04, 2011

REV	DESCRIPTION	AUTHOR	DATE	CHECKED B	QA/QC
0	ISSUED FOR FABRICATION	S. Boerckel	1/27/2011	T. KOONTZ	B. MADDUX

REVISION HISTORY

© COPYRIGHT, 2009, PRO STEEL MANUFACTURING ALL RIGHTS RESERVED. THIS DRAWING IS THE PROPRIETARY AND/OR CONFIDENTIAL PROPERTY OF PRO STEEL MANUFACTURING AND IS LOANED IN STRICT CONFIDENCE WITH THE UNDERSTANDING THAT IT WILL NOT BE REPRODUCED NOR USED FOR ANY PURPOSE EXCEPT THAT FOR WHICH IT IS LOANED. IT SHALL BE IMMEDIATELY RETURNED ON DEMAND, AND IS SUBJECT TO ALL OTHER TERMS AND CONDITIONS OF ANY WRITTEN AGREEMENT OR PURCHASE ORDER WHICH INCORPORATES OR RELATES TO THIS DRAWING.

UNLESS OTHERWISE SPECIFIED
DIMENSIONS ARE IN INCHES
TOLERANCES ON DECIMALS

X.X	± 0.10
X.XX	± 0.06
X.XXX	± 0.03
HOLE DIA	± 0.03
ANGLES	± 0.50°
SURFACE	HFS-SF ✓
SQUARENESS	± 0.06

DO NOT SCALE DRAWING

DRAWN	S. Boerckel	1/27/2011
CHECKED	T. KOONTZ	2/3/2011
QA	B. MADDUX	2/3/2011
REVIEWER		
PROJECT NO	409-2956-1	
CUSTOMER	EDC - MARGARITA ISLAND	
JOB NO		

ProEnergy SERVICES
2201 ProEnergy Blvd
SEDALIA, MISSOURI 65301 USA
PHONE: 1-660-829-5100
FAX: 1-660-829-1160

TITLE
PUMP MOUNT
PARTS
LIQUID FUEL FORWARDING SKID - 7EA

SIZE	ML:	DWG NO	REV
D		409-2956-LFF7EA-0611-2	0

SCALE: 1/4"=1" WEIGHT: SHEET 2